DES inserts - small: single, double and quadruple

- Inserts for cables from 2 to 17 mm diameter
- "Blind" version available
- Grey and black colours available
- UL94-V0 for both colours
- ATEX version on request (see sec. 7)

Model	Code	Ø Cable [mm]	Model	Code	Pcs /pack
SPP 0G	1731020100	"blind"	SPP 0B	1731020200	
SPP 2G	1731020102	2-3	SPP 2B	1731020202	
SPP 3G	1731020103	3-4	SPP 3B	1731020203	
SPP 4G	1731020104	4-5	SPP 4B	1731020204	
SPP 5G	1731020105	5-6	SPP 5B	1731020205	
SPP 6G	1731020106	6-7	SPP 6B	1731020206	
SPP 7G	1731020107	7-8	SPP 7B	1731020207	
SPP 8G	1731020108	8-9	SPP 8B	1731020208	10
SPP 9G	1731020109	9-10	SPP 9B	1731020209	
SPP 10G	1731020110	10-11	SPP 10B	1731020210	
SPP 11G	1731020111	11-12	SPP 11B	1731020211	
SPP 12G	1731020112	12-13	SPP 12B	1731020212	
SPP 13G	1731020113	13-14	SPP 13B	1731020213	
SPP 14G	1731020114	14-15	SPP 14B	1731020214	
SPP 15G	1731020115	15-16	SPP 15B	1731020215	
SPP 16G	1731020116	16-17	SPP 16B	1731020216	
SPP 2x2G	1731020304	2 x 2	SPP 2x2B	1731020404	
SPP 2X3G	1731020306	2 x 3	SPP 2X3B	1731020406	
SPP 2X4G	1731020308	2 x 4	SPP 2X4B	1731020408	
SPP 2X5G	1731020310	2 x 5	SPP 2X5B	1731020410	10
SPP 2X6G	1731020312	2 x 6	SPP 2X6B	1731020412	
SPP 2X7G	1731020314	2 x 7	SPP 2X7B	1731020414	
SPP 2X8G	1731020316	2 x 8	SPP 2X8B	1731020416	
SPP 4X2G	1731020318	4 x 2	SPP 4X2B	1731020418	
SPP 4X3G	1731020320	4 x 3	SPP 4X3B	1731020420	
SPP 4X4G	1731020322	4 x 4	SPP 4X4B	1731020422	10
SPP 4X5G	1731020324	4 x 5	SPP 4X5B	1731020424	
SPP 4X6G	1731020326	4 x 6	SPP 4X6B	1731020426	
SPP ASI G	1731021130	1 x ASI	-	-	10
SPP ASI2 G	1731021140	2 x ASI	-	-	

The SPP inserts enable several cables from 2 to 17 mm diameter to be installed in the DES splittable frame.

The 2X and 4X versions allow multiple cables in the same grommet.

Technical data

Material: TPE

Flammability: self-extinguishing acc. to UL94-V0 (grey or black)

Temperature: -40°C… +110°C (static)

Features: halogens and silicones free

Related products

DES 24	DES L5	DESPRED
DES 24-90	DES L4	DESPRED 90
DES 16	DES L3	DESCLICK
DES 10	DES L2	DESCLICK 50
DES Q		

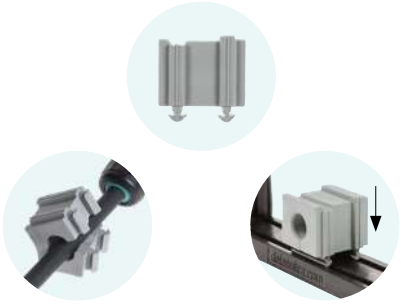

IP66 · NEMA 4X · NEMA 12 · HL3 EN 45545-2 · ECOLAB · UL94-V0 · UV ISO 4892-2A · RoHS COMPLIANT · TPE · +110 −40 °C

© Detas SpA - ISO9001/ ISO14001 certified company
Via Treponti, 29 - 25086 Rezzato BS - Italy - Tel. +39 030 2594120 - info@detasultra.com - **www.detasultra.com**

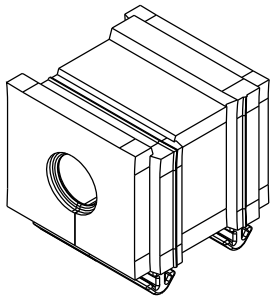

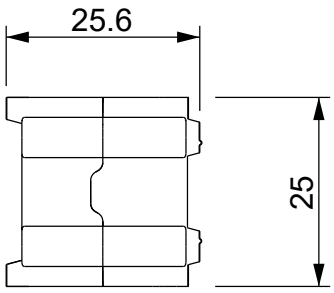

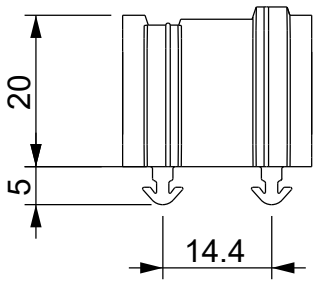

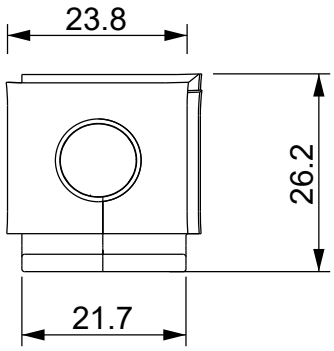

Grey		Black		Ø Cable	Grey	Black
Description	Code	Description	Code	[mm]		
SPP 0G	1731020100	SPP 0B	1731020200	/	SPP 0GA 1731320100	SPP 0BA 1731320200
SPP 2G	1731020102	SPP 2B	1731020202	2 - 3	SPP 2GA 1731320102	SPP 2BA 1731320202
SPP 3G	1731020103	SPP 3B	1731020203	3 - 4	SPP 3GA 1731320103	SPP 3BA 1731320203
SPP 4G	1731020104	SPP 4B	1731020204	4 - 5	SPP 4GA 1731320104	SPP 4BA 1731320204
SPP 5G	1731020105	SPP 5B	1731020205	5 - 6	SPP 5GA 1731320105	SPP 5BA 1731320205
SPP 6G	1731020106	SPP 6B	1731020206	6 - 7	SPP 6GA 1731320106	SPP 6BA 1731320206
SPP 7G	1731020107	SPP 7B	1731020207	7 - 8	SPP 7GA 1731320107	SPP 7BA 1731320207
SPP 8G	1731020108	SPP 8B	1731020208	8 - 9	SPP 8GA 1731320108	SPP 8BA 1731320208
SPP 9G	1731020109	SPP 9B	1731020209	9 - 10	SPP 9GA 1731320109	SPP 9BA 1731320209
SPP 10G	1731020110	SPP 10B	1731020210	10 - 11	SPP 10GA 1731320110	SPP 10BA 1731320210
SPP 11G	1731020111	SPP 11B	1731020211	11 - 12	SPP 11GA 1731320111	SPP 11BA 1731320211
SPP 12G	1731020112	SPP 12B	1731020212	12 - 13	SPP 12GA 1731320112	SPP 12BA 1731320212
SPP 13G	1731020113	SPP 13B	1731020213	13 - 14	SPP 13GA 1731320113	SPP 13BA 1731320213
SPP 14G	1731020114	SPP 14B	1731020214	14 - 15	SPP 14GA 1731320114	SPP 14BA 1731320214
SPP 15G	1731020115	SPP 15B	1731020215	15 - 16	SPP 15GA 1731320115	SPP 15BA 1731320215
SPP 16G	1731020116	SPP 16B	1731020216	16 - 17	SPP 16GA 1731320116	SPP 16BA 1731320216

Flammability: UL94-V0, self-extinguishing
Temperature: -40°C … +110°C
Properties: halogen-free, silicone-free

IP66 · NEMA 4X · NEMA 12 · HL3 EN 45545-2 · Marine Type · ECOLAB · UL94-V0 · UV ISO 4892-2A · RoHS COMPLIANT · TPE · +110 / -40 °C

Codice / Code	Descrizione / Description	Rev.
see table	SPP	003

Materiale / Material	Colore / Color	Peso / Weight (g)	Unità di misura / Measure units	Formato / Format	Scala / Scale	
TPE	see table	-	mm	A4	1:1	UNI-ISO 2768-mK

DETASULTRA
www.detasultra.com

QUESTO DISEGNO E LE SUE INFORMAZIONI SONO STRETTAMENTE RISERVATE DI PROPRIETA' DETAS SPA.
NON UTILIZZARE PER SCOPI DIVERSI DA QUELLI PER CUI SONO STATE FORNITE. DO NOT SCALE DRAWING.

Data / Date	Numero foglio / Sheet number	Numero progetto/ Project number
15/03/2021	-	-

Disegn. / Drawn	Note / Notes
ravezzano@detas.com	-

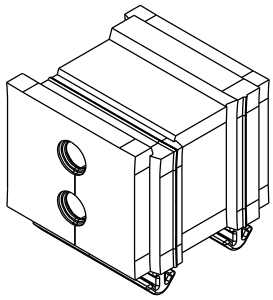

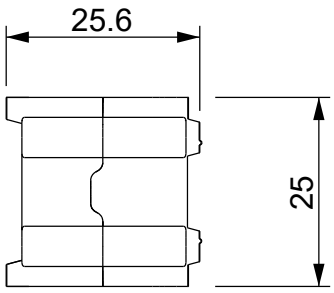

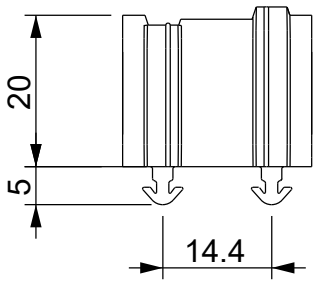

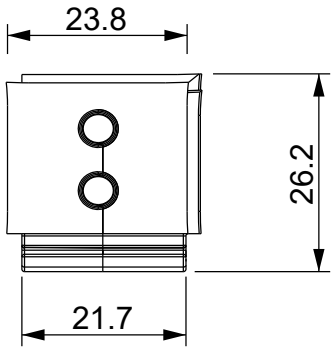

Code	Description	Color	Ø Cable [mm]	ATEX
1731020304	SPP 2x2G	Grey	2	SPP 2x2GA 1731320304
1731020306	SPP 2x3G	Grey	3	SPP 2x3GA 1731320306
1731020308	SPP 2x4G	Grey	4	SPP 2x4GA 1731320308
1731020310	SPP 2x5G	Grey	5	SPP 2x5GA 1731320310
1731020312	SPP 2x6G	Grey	6	SPP 2x6GA 1731320312
1731020314	SPP 2x7G	Grey	7	SPP 2x7GA 1731320314
1731020316	SPP 2x8G	Grey	8	SPP 2x8GA 1731320316
1731020404	SPP 2x2B	Black	2	SPP 2x2BA 1731320404
1731020406	SPP 2x3B	Black	3	SPP 2x3BA 1731320406
1731020408	SPP 2x4B	Black	4	SPP 2x4BA 1731320408
1731020410	SPP 2x5B	Black	5	SPP 2x5BA 1731320410
1731020412	SPP 2x6B	Black	6	SPP 2x6BA 1731320412
1731020414	SPP 2x7B	Black	7	SPP 2x7BA 1731320414
1731020416	SPP 2x8B	Black	8	SPP 2x8BA 1731320416

Flammability: UL94-V0, self-extinguishing
Temperature: -40°C … +110°C
Properties: halogen-free, silicone-free

IP66 · NEMA 4X · NEMA 12 · HL3 EN 45545-2 · Marine Type · ECOLAB · UL94-V0 · UV ISO 4892-2A · RoHS COMPLIANT · TPE · +110 / -40 °C

Codice / Code	Descrizione / Description	Rev.
see table	SPP 2X	003

Materiale / Material	Colore / Color	Peso / Weight (g)	Unità di misura / Measure units	Formato / Format	Scala / Scale	
TPE	see table	-	mm	A4	1:1	UNI-ISO 2768-mK

DETASULTRA
www.detasultra.com

QUESTO DISEGNO E LE SUE INFORMAZIONI SONO STRETTAMENTE RISERVATE DI PROPRIETA' DETAS SPA.
NON UTILIZZARE PER SCOPI DIVERSI DA QUELLI PER CUI SONO STATE FORNITE. DO NOT SCALE DRAWING.

Data / Date	Numero foglio / Sheet number	Numero progetto/ Project number
15/03/2021	-	-

Disegn. / Drawn	Note / Notes
ravezzano@detas.com	-

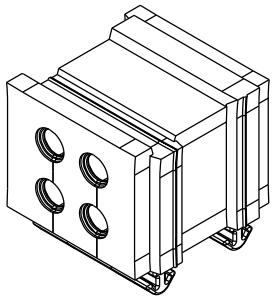

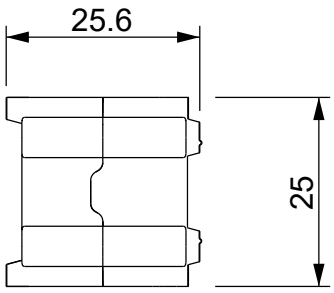

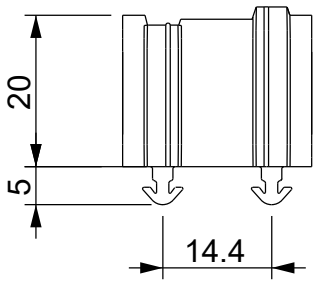

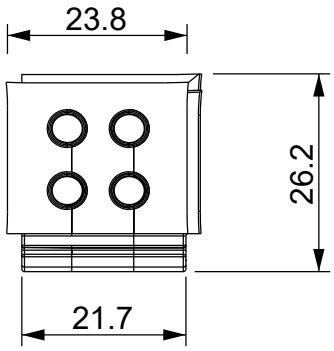

Code	Description	Color	Ø Cable [mm]	ATEX
1731020318	SPP 4x2G	Grey	2	SPP 4x2GA 1731320318
1731020320	SPP 4x3G	Grey	3	SPP 4x3GA 1731320320
1731020322	SPP 4x4G	Grey	4	SPP 4x4GA 1731320322
1731020324	SPP 4x5G	Grey	5	SPP 4x5GA 1731320324
1731020326	SPP 4x6G	Grey	6	SPP 4x6GA 1731320326
1731020418	SPP 4x2B	Black	2	SPP 4x2BA 1731320418
1731020420	SPP 4x3B	Black	3	SPP 4x3BA 1731320420
1731020422	SPP 4x4B	Black	4	SPP 4x4BA 1731320422
1731020424	SPP 4x5B	Black	5	SPP 4x5BA 1731320424
1731020426	SPP 4x6B	Black	6	SPP 4x6BA 1731320426

Flammability: UL94-V0, self-extinguishing
Temperature: -40°C … +110°C
Properties: halogen-free, silicone-free

IP66 · NEMA 4X · NEMA 12 · HL3 EN 45545-2 · Marine Type · ECOLAB · UL94-V0 · UV ISO 4892-2A · RoHS COMPLIANT · TPE · +110 −40 °C

Codice / Code	Descrizione / Description	Rev.
see table	SPP 4X	003

Materiale / Material	Colore / Color	Peso / Weight (g)	Unità di misura / Measure units	Formato / Format	Scala / Scale	
TPE	see table	-	mm	A4	1:1	UNI-ISO 2768-mK

DETASULTRA
www.detasultra.com

QUESTO DISEGNO E LE SUE INFORMAZIONI SONO STRETTAMENTE RISERVATE DI PROPRIETA' DETAS SPA.
NON UTILIZZARE PER SCOPI DIVERSI DA QUELLI PER CUI SONO STATE FORNITE. DO NOT SCALE DRAWING.

Data / Date	Numero foglio / Sheet number	Numero progetto/ Project number
15/03/2021	-	-

Disegn. / Drawn	Note / Notes
ravezzano@detas.com	-